PRODUCT NR.
85967-XYZ
85967-XYZLF

PLATING CONTACT AREA:

DASH NR:	PERFORMANCE LEVEL
-1YY/1YYLF	TELCORDIA CO
-2YY/2YYLF	CUSTOMER SPECIAL
-3YY/3YYLF	CUSTOMER SPECIAL

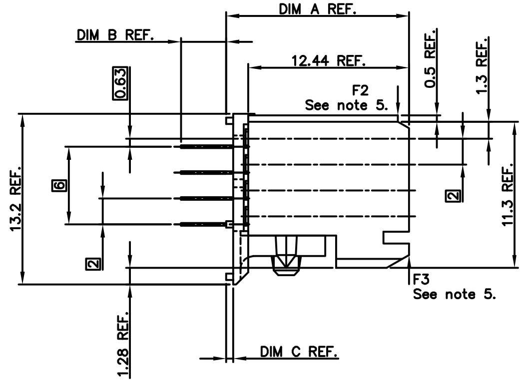

SEE VIEW Y

DASH NR	ROW #	48	47	46	45	44	43	42	41	40	39	38	37	36	35	34	33	32	31	30	29	28	27	26	25	24	23	22	21	20	19	18	17	16	15	14	13	12	11	10	9	8	7	6	5	4	3	2	1	PCB THICKN.	DIM A	DIM B	DIM C	DIM D
-X01 -X01LF	D	+	+	+	+	+	+	+	+	+	+	+	+	+	+	+	+	+	+	+	+	+	+	+	+	+	+	+	+	+	+	+	+	+	+	+	+	+	+	+	+	+	+	+	+	+	+	+	+	2.4	14.14	3.50	0.54	17.64
	C	+	+	+	+	+	+	+	+	+	+	+	+	+	+	+	+	+	+	+	+	+	+	+	+	+	+	+	+	+	+	+	+	+	+	+	+	+	+	+	+	+	+	+	+	+	+	+	+					
	B	+	+	+	+	+	+	+	+	+	+	+	+	+	+	+	+	+	+	+	+	+	+	+	+	+	+	+	+	+	+	+	+	+	+	+	+	+	+	+	+	+	+	+	+	+	+	+	+					
	A	+	+	+	+	+	+	+	+	+	+	+	+	+	+	+	+	+	+	+	+	+	+	+	+	+	+	+	+	+	+	+	+	+	+	+	+	+	+	+	+	+	+	+	+	+	+	+	+					
-X02 -X02LF	D	+	+	+	+	+	+	+	+	+	+	+	+	+	+	+	+	+	+	+	+	+	+	+	+	+	+	+	+	+	+	+	+	+	+	+	+	+	+	+	+	+	+	+	+	+	+	+	+	3.2	13.60	4.04	0.00	17.10
	C	+	+	+	+	+	+	+	+	+	+	+	+	+	+	+	+	+	+	+	+	+	+	+	+	+	+	+	+	+	+	+	+	+	+	+	+	+	+	+	+	+	+	+	+	+	+	+	+					
	B	+	+	+	+	+	+	+	+	+	+	+	+	+	+	+	+	+	+	+	+	+	+	+	+	+	+	+	+	+	+	+	+	+	+	+	+	+	+	+	+	+	+	+	+	+	+	+	+					
	A	+	+	+	+	+	+	+	+	+	+	+	+	+	+	+	+	+	+	+	+	+	+	+	+	+	+	+	+	+	+	+	+	+	+	+	+	+	+	+	+	+	+	+	+	+	+	+	+					
-X03 -X03LF	D	+	+	+	+	+	+	+	+	+	+	+	+	+	+	+	+	+	+	+	+	+	+	+	+	+	+	+	+	+	+	+	+	+	+	+	+	+	+	+	+	+	+	+	+	+	+	+	+	2.4	13.60	3.24	0.00	17.10
	C	+	+	+	+	+	+	+	+	+	+	+	+	+	+	+	+	+	+	+	+	+	+	+	+	+	+	+	+	+	+	+	+	+	+	+	+	+	+	+	+	+	+	+	+	+	+	+	+					
	B	+	+	+	+	+	+	+	+	+	+	+	+	+	+	+	+	+	+	+	+	+	+	+	+	+	+	+	+	+	+	+	+	+	+	+	+	+	+	+	+	+	+	+	+	+	+	+	+					
	A	+	+	+	+	+	+	+	+	+	+	+	+	+	+	+	+	+	+	+	+	+	+	+	+	+	+	+	+	+	+	+	+	+	+	+	+	+	+	+	+	+	+	+	+	+	+	+	+					
-X04 -X04LF	D	+	+	+	+	+	+	+	+	+	+	+	+	+	+	+	+	+	+	+	+	+	+	+	+	+	+	+	+	+	+	+	+	+	+	+	+	+	+	+	+	+	+	+	+	+	+	+	+	1.6	13.60	2.39	0.00	17.10
	C	+	+	+	+	+	+	+	+	+	+	+	+	+	+	+	+	+	+	+	+	+	+	+	+	+	+	+	+	+	+	+	+	+	+	+	+	+	+	+	+	+	+	+	+	+	+	+	+					
	B	+	+	+	+	+	+	+	+	+	+	+	+	+	+	+	+	+	+	+	+	+	+	+	+	+	+	+	+	+	+	+	+	+	+	+	+	+	+	+	+	+	+	+	+	+	+	+	+					
	A	+	+	+	+	+	+	+	+	+	+	+	+	+	+	+	+	+	+	+	+	+	+	+	+	+	+	+	+	+	+	+	+	+	+	+	+	+	+	+	+	+	+	+	+	+	+	+	+					
-X05 -X05LF	D	+	+	+	+	+	+	+	+	+	+	+	+	+	+	+	+	+	+	+	+	+	+	+	+	+	+	+	+	+	+	+	+	+	+	+	+	+	+	+	+	+	+	+	+	+	+	+	+	1.6	14.14	2.70	0.54	17.64
	C	+	+	+	+	+	+	+	+	+	+	+	+	+	+	+	+	+	+	+	+	+	+	+	+	+	+	+	+	+	+	+	+	+	+	+	+	+	+	+	+	+	+	+	+	+	+	+	+					
	B	+	+	+	+	+	+	+	+	+	+	+	+	+	+	+	+	+	+	+	+	+	+	+	+	+	+	+	+	+	+	+	+	+	+	+	+	+	+	+	+	+	+	+	+	+	+	+	+					
	A	+	+	+	+	+	+	+	+	+	+	+	+	+	+	+	+	+	+	+	+	+	+	+	+	+	+	+	+	+	+	+	+	+	+	+	+	+	+	+	+	+	+	+	+	+	+	+	+					
-X06 -X06LF	D	+	+	+	+	+	+	+	+	+	+	+	+	+	+	+	+	+	+	+	+	+	+	+	+	+	+	+	+	+	+	+	+	+	+	+	+	+	+	+	+	+	+	+	+	+	+	+	+	1.6	14.64	3.00	0.54	18.14
	C	+	+	+	+	+	+	+	+	+	+	+	+	+	+	+	+	+	+	+	+	+	+	+	+	+	+	+	+	+	+	+	+	+	+	+	+	+	+	+	+	+	+	+	+	+	+	+	+					
	B	+	+	+	+	+	+	+	+	+	+	+	+	+	+	+	+	+	+	+	+	+	+	+	+	+	+	+	+	+	+	+	+	+	+	+	+	+	+	+	+	+	+	+	+	+	+	+	+					
	A	+	+	+	+	+	+	+	+	+	+	+	+	+	+	+	+	+	+	+	+	+	+	+	+	+	+	+	+	+	+	+	+	+	+	+	+	+	+	+	+	+	+	+	+	+	+	+	+					
-X07 -X07LF	D	+	+	+	+	+	+	+	+	+	+	+	+	+	+	+	+	+	+	+	+	+	+	+	+	+	+	+	+	+	+	+	+	+	+	+	+	+	+	+	+	+	+	+	+	+	+	+	+	1.6	15.14	2.50	0.54	18.64
	C	+	+	+	+	+	+	+	+	+	+	+	+	+	+	+	+	+	+	+	+	+	+	+	+	+	+	+	+	+	+	+	+	+	+	+	+	+	+	+	+	+	+	+	+	+	+	+	+					
	B	+	+	+	+	+	+	+	+	+	+	+	+	+	+	+	+	+	+	+	+	+	+	+	+	+	+	+	+	+	+	+	+	+	+	+	+	+	+	+	+	+	+	+	+	+	+	+	+					
	A	+	+	+	+	+	+	+	+	+	+	+	+	+	+	+	+	+	+	+	+	+	+	+	+	+	+	+	+	+	+	+	+	+	+	+	+	+	+	+	+	+	+	+	+	+	+	+	+					

(CONFIGURATION / COLUMN #)

"-" POSITION NOT LOADED
"+" POSITION LOADED

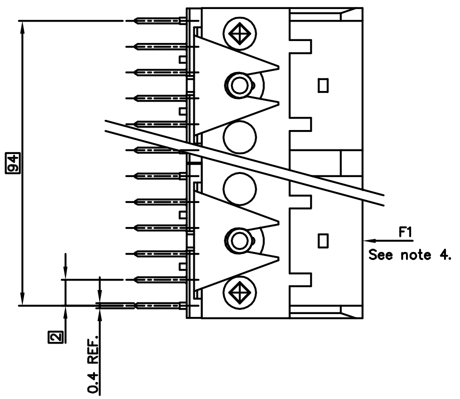

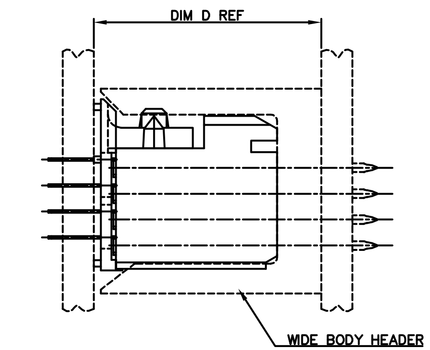

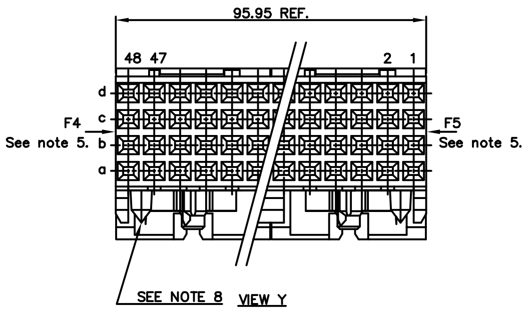

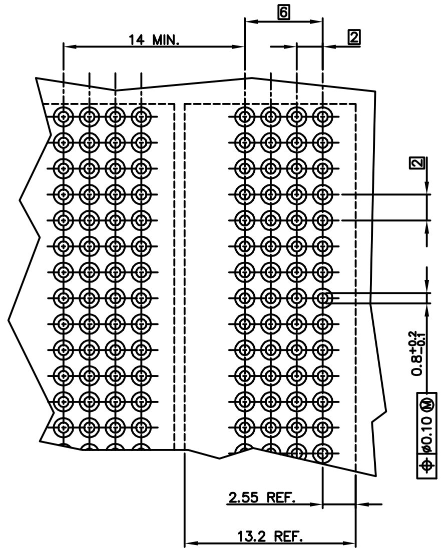

RECOMMENDED HOLE PATTERN,
COMPONENT SIDE.

NOTES:

1. BODY MAT'L: LIQUID CRYSTAL POLYMER 30% GLASS FLAME RETARDANT ACC. UL 94-V0
2. TERMINAL MATERIAL: PHOSPHOR BRONZE.
3. PLATING SOLDERTAILS 2-8 μm SnPb 90-97. OR 2-8 μm PURE Sn FOR LF.
4. LOAD IN THIS DIRECTION (E.G. THROUGH CODING) 30 NEWTON MAXIMUM PER 12 mm CONNECTOR LENGTH.
5. LOAD IN THIS DIRECTION 100 NEWTON MAXIMUM PER CONNECTOR.
6. TO ENSURE PROPER ALIGNMENT OF MULTIPLE MODULES ON A BOARD THE USE OF A FIXTURE IS RECOMMENDED.
7. PRODUCT MARKING: PARTNUMBER & BATCH I.D.
8. DIAMOND LOCATION PEG ARE ONLY EXISTED ON THE BOTH SIDES OF PRODUCT.
9. THIS PRODUCT MEETS EUROPEAN UNION DIRECTIVES AND OTHER COUNTRY REGULATIONS AS DESCRIBED IN GS-22-008 .
10. THE HOUSING WILL WITHSTAND EXPOSURE TO 260 DEGREE PEAK TEMPERATURE FOR 10 SECONDS IN A WAVE SOLDER APPLICATION.

mat'l. code | tolerances unless otherwise specified | CUSTOMER COPY | FCI ELECTRONICS www.fciconnect.com

ltr	ecn no	dr	date
H	0008-0171	TER	9/10/08
J	0009-0088	Cenh	08/06/09
D	H80380	PHE	980616
E	V81450	DDB	990827
F	0006-0078	CLu	050412
G	0007-0170	Cenh	05/22/07

linear | angles | projection
dr M. MEIJER 960515
engr M. MEIJER 960515
chr P. SCHALK 960515
appd P. SCHALK 960515
mm | scale 5:1
sheet index | revision J | sheet 1

title: STR SIGN RCP STB + WAFER 96mm
product family: METRAL (tm) | code 213
size A1 | dwg no 85967 | sheet 1 of 1