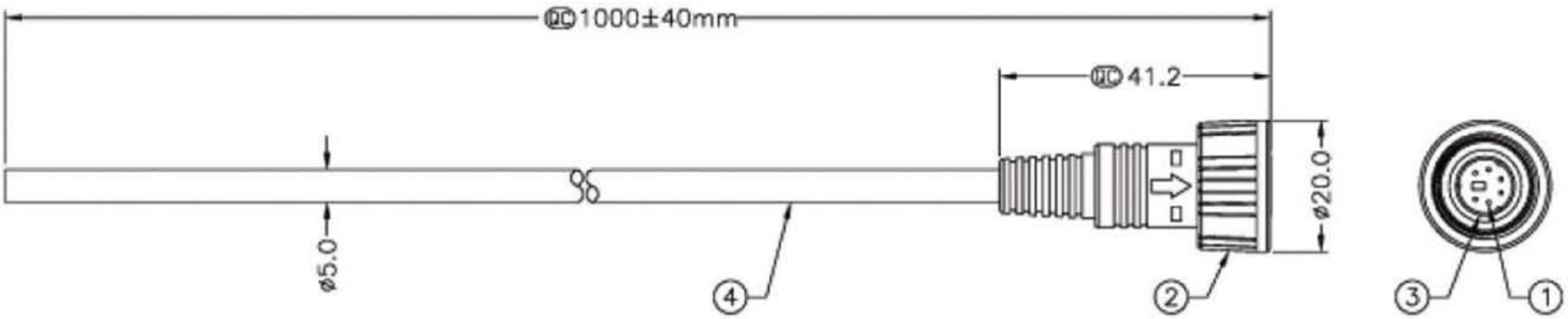

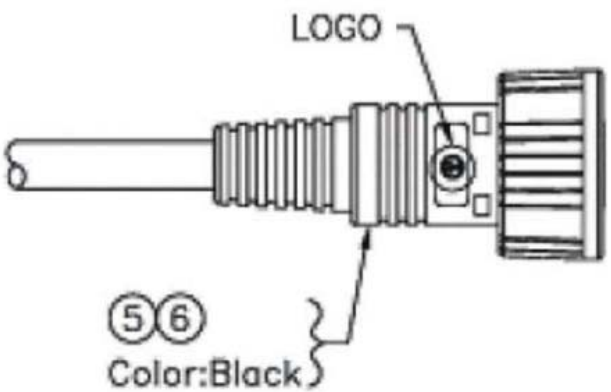

Pin Assignments
Front View

Material:

- Connector: Mini DIN Plug
- Cable: UL2464 26AWG*6C+D+T
  Black, OD=5.0mm

RoHS Complaint

Scale	1:1							Name
TOLERANCE						Drawn	12.01.11	Chappell
X.X	±0.40					Approved		
X.XX	±0.25							
X.XXX	±0.15							
Angle	±3°							
			Modification	Date	Name			

ASSMANN WSW components

Item No.
A-KMD-06AFMM-WP-R

Title
Waterproof Mini DIN Connector - 6 Pin, with Cable, 1 Meter

Drawing No.

rev00

Replace

Sheet