THIS COPY IS PROVIDED ON A RESTRICTED BASIS AND IS NOT TO BE USED IN ANY WAY DETRIMENTAL TO THE INTERESTS OF PANDUIT CORP.

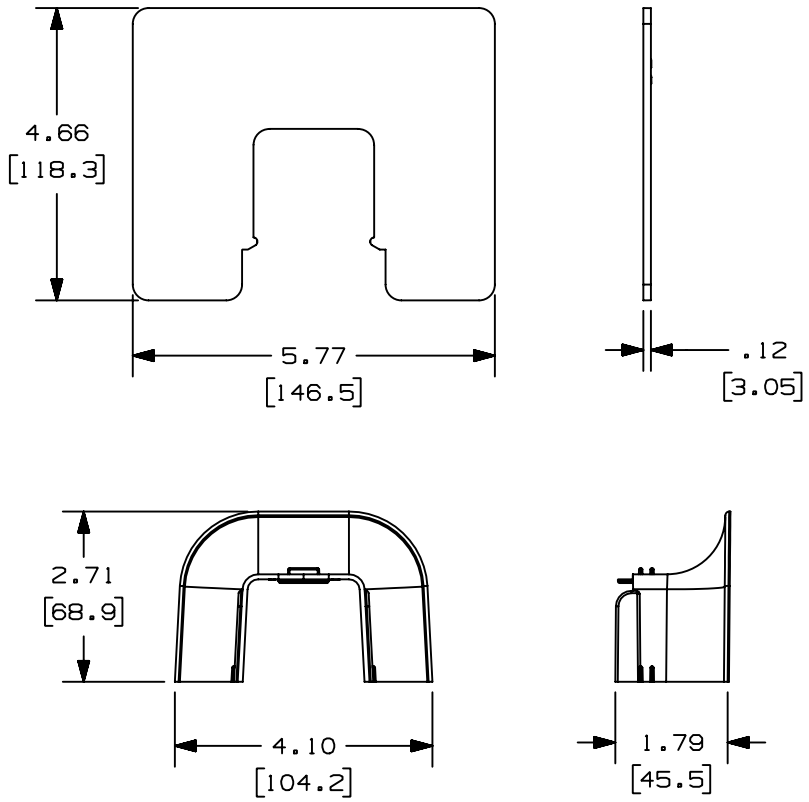

PANDUIT PART NO.	WEIGHT
OFR20WE	.174 lbs / EACH (78.9 g / EACH)

NOTES:
1. SEE CURRENT CATALOG FOR ADDITIONAL PART NUMBER SUFFIXES TO INDICATE COLOR AND/OR PACKAGE QUANTITY.
2. DIMENSIONS IN PARENTHESES ARE IN METRIC.
3. FITTING PROVIDES 1" MIN. BEND RADIUS.

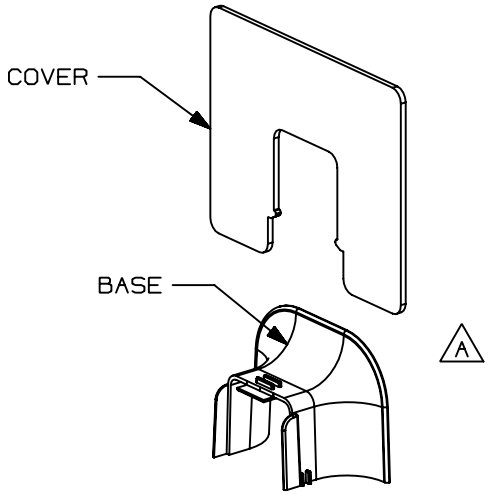

CAD FILENAME/LAYERS D38507BD_DC_OFR20WE_01A.PRT

PANDUIT CORP. TINLEY PARK, ILLINOIS

OFFICE FURNITURE WALL ENTRANCE FITTING (OFR20WE)
CUSTOMER DRAWING

REV	DATE	BY	CHK	DESCRIPTION	ECN	CHK	CUST	SUP
2	06-18-03	JHE	RMHI	A. REVISED GEOMETRY	38507-03	RGRO	RGRO	
1	04-28-03	JBN	RMHI	RELEASED TO PRODUCTION	38507-03	RGRO	RGRO	
R	03-20-03	JBN	RMHI	DRAWING RELEASED				

UNLESS OTHERWISE SPECIFIED, DIMENSIONAL TOLERANCES ARE:
(.X) ± (.XXX) ±
(.XX) ± .03 [.8] ANGLES ±

UNLESS OTHERWISE SPECIFIED, ALL DIMENSIONS ARE GIVEN IN INCHES, THIRD ANGLE PROJECTION.

DRAWN BY JBN
DATE 03-20-03
CHK'D RMHI
MAT'L: PVC
SCALE NONE
DRAWING NO. 38507-03
DWG SIZE A